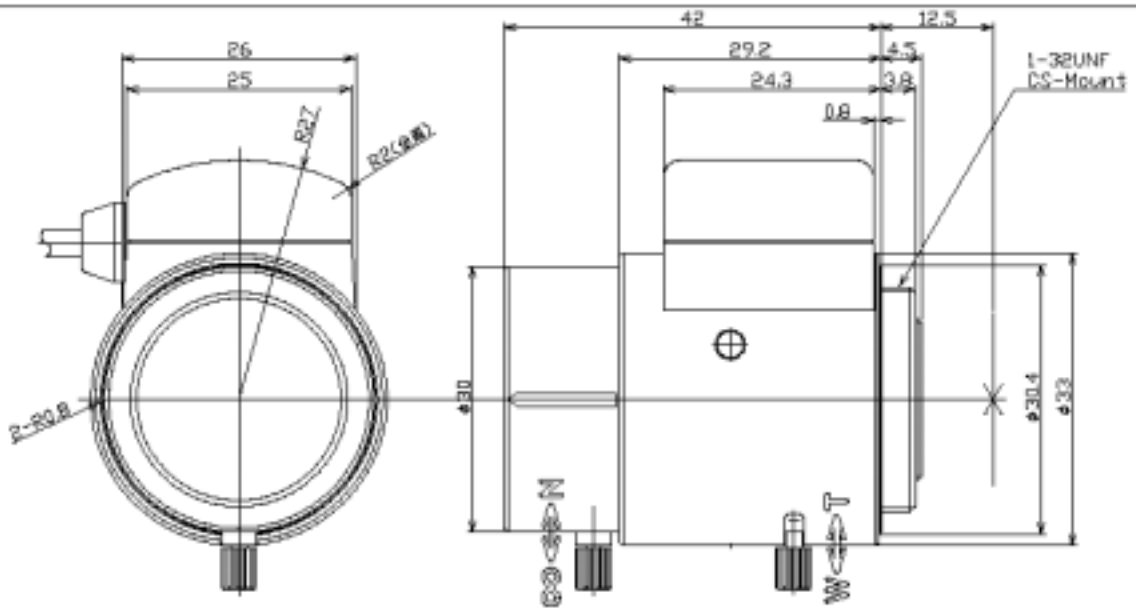

SPECIFICATION

AUTO IRIS

1. USE		FOR 1/3" B/W COLOR CAMERA			
2. FOCAL LENGTH		3-8mm			
3. ZOOM RATIO		2.7x			
4. MAX. DIA. RATIO		F 1.0			
5. IRIS RANGE		F 1.0-360			
6. IMAGE SIZE		φ 6			
7. BACK FOCAL LENGTH		W 8.64 mm	T 15.73 mm		in air
8. FLANGE FOCAL LENGTH		12.5 mm			in air
9. FOCUS RANGE		0.2m			
10. FIELD ANGLE	DIA.	W 118.2°		T 44.4°	
	HOR. HOR.	92.4°		35.6°	
	VER.	68.0°		26.6°	
11. FIELD OF VIER AT M.O.D.		W 713 mm		T 170 mm	
	HOR.	438 mm		133 mm	
	VER.	282 mm		98 mm	
12. CLEAR APERTURE	FRONT	φ 14.8			
13. CLEAR APERTURE	REAR	φ 8.6			
14. EXIT PUPIL POSITION		W -98.0 mm		T 21.0 mm	
15. MOUNT		CS-MOUNT			
16. FILTER SCREW SIZE		——			
17. DISTORTION (TV)		W -16.8 %		T 1.8 %	
18. WEIGHT					

DC (DIRECT CONTROL)

DRIVE COIL	RESISTOR	190Ω	(20° C)
	COLOR	RED(+)	BLACK
BRAKE COIL	RESISTOR	1150Ω	(20° C)
	COLOR	YELLOW(+)	GREEN
DRIVE VOLT.	OPEN	LESS THAN +4V	
	CLOSE	OVER THAN 0V	
		W/CLOSING SPRING	

		1/3" F1.0 / 3-8mm		
		LMVZ38A-IR		