GOYO OPTICAL INC.

Industrial Lens

High Resolution Megapixel Lenses

Item No.GMTHR412514MCN

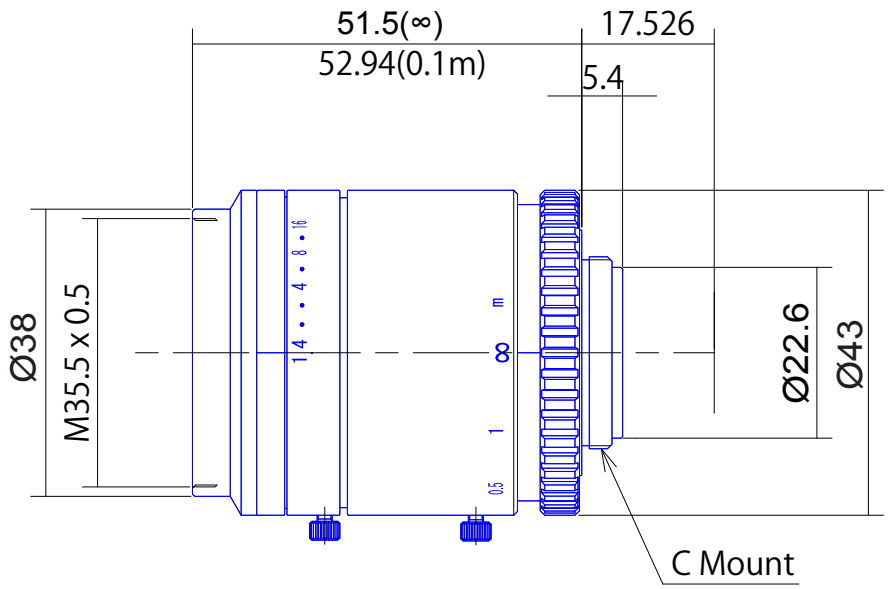

ITEM NO.	GMTHR412514MCN
Focal Length	12.7 (mm)
Iris Range	F1.44 - 16
Angle of View (Hx V x D)	56.45° x 42.51° x 67.59°
MOD	0.1 (m)
Filter Thread	M35.5 , P=0.5
Dimention (D x L)	Ø43 x 52.94 (mm)
Weight	- (g)
Notes	-

GOYO OPTICAL Inc.,
3-8-31 HAMASAKI, ASAKA, SAITAMA 351-0033, JAPAN,
TEL:+81-48-474-2235 FAX:+81-48-474-7373
http://www.goyooptical.com E-MAIL:info@goyooptical.com